Advanced Tip Design of Dynisco Vertex™

No fill of any type.

An elegant (simple) design.
No moving internal parts that can introduce measurement error.

Fortified sidewalls provide additional diaphragm support from side stress.
Not found on any other sensor.

Hardened Inconel is standard.
Inconel provides lasting protection, even in tough applications.

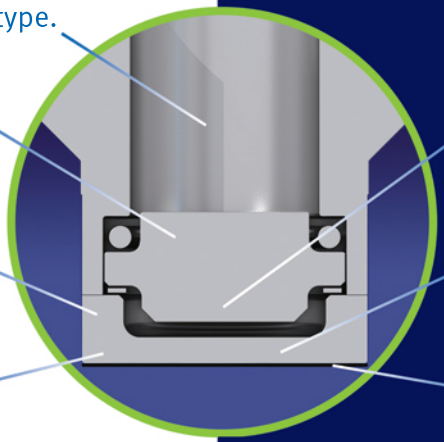

The tip-resident technology provides a primary or direct pressure measurement.

The diaphragm is several times thicker than in stancard technology.

Standard DyMax® coated Inconel provides additional resistance to abrasion.

Dynisco